5007

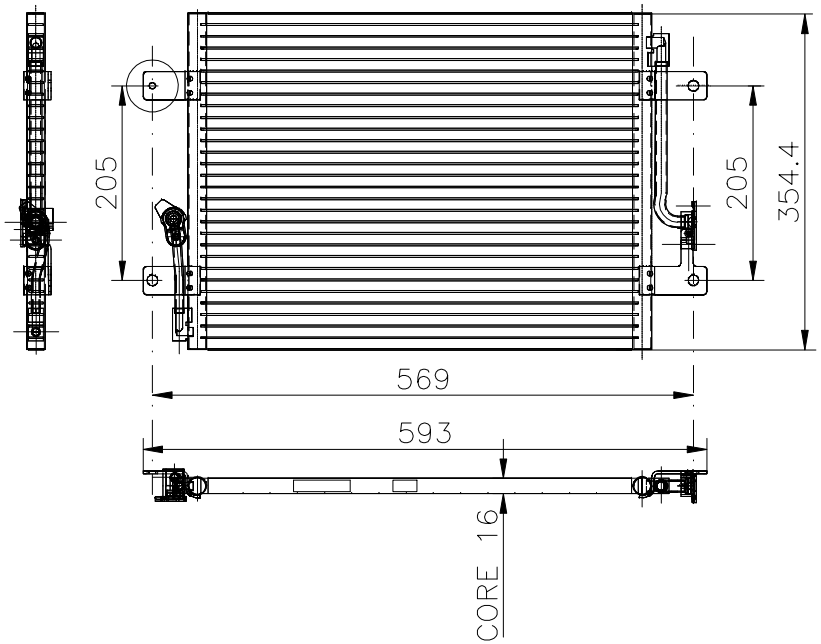

Model : *FIAT PALIO 1.2*

Kale Part Nr: *137000*

Material: *AL–AL*