All trademarks and vehicle models (including their names and pictures) mentioned in this catalogue are for reference only. Our production is not original replacement parts but interchangeable against original parts.

Technical Specification Overview

TYC Order number:	803-0003	Cooling Fan Fitment for:	BMW E-36, E-34, E-32 and E-31

Specifications:	Single Push Fan, 2-Speed, 170/370 W, 3-Pin Connector, Voltage:13.5V Current: 12.93A / 26.94A, Speed: 1716 / 2191RPM, Rotation: CW
Suited for:	BMW versions of E-36 3-Serie 89-00, E-34 5-serie 87-96, E-32 7-serie 88- 94 and E-31 8-serie 90-99 equipped with AC

OE References:

64541392913, 64541374001, 64541382775, 64548351577

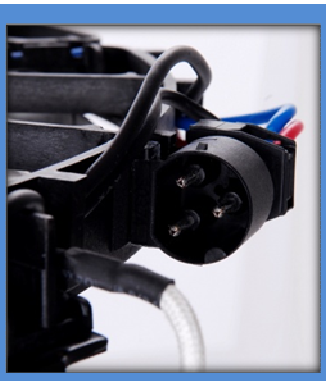

All trademarks and vehicle models (including their names and pictures) mentioned in this catalogue are for reference only. Our production is not original replacement parts but interchangeable against original parts.

All trademarks and vehicle models (including their names and pictures) mentioned in this catalogue are for reference only. Our production is not original replacement parts but interchangeable against original parts.

Lűftersysteme		Fan Systems	
Lűftermotor		**Cooling Motor**	
Technische Daten:		**Technical Data:**	
Betriebspannung:	13.5 V	Operation voltage:	13.5 V
Stromaufname:	12.93A / 26.94 A	Current consumption:	12.93A / 26.94 A
Nennleistung:	170/ 370 W	Nominal Power:	170/370 W
Umdrehung ± 10 %	1427/ 2042 RPM	Revolution ± 10 %	1427/ 2042 RPM

Außenmaße / External dimensions:

Dreirichtung/ Rotation

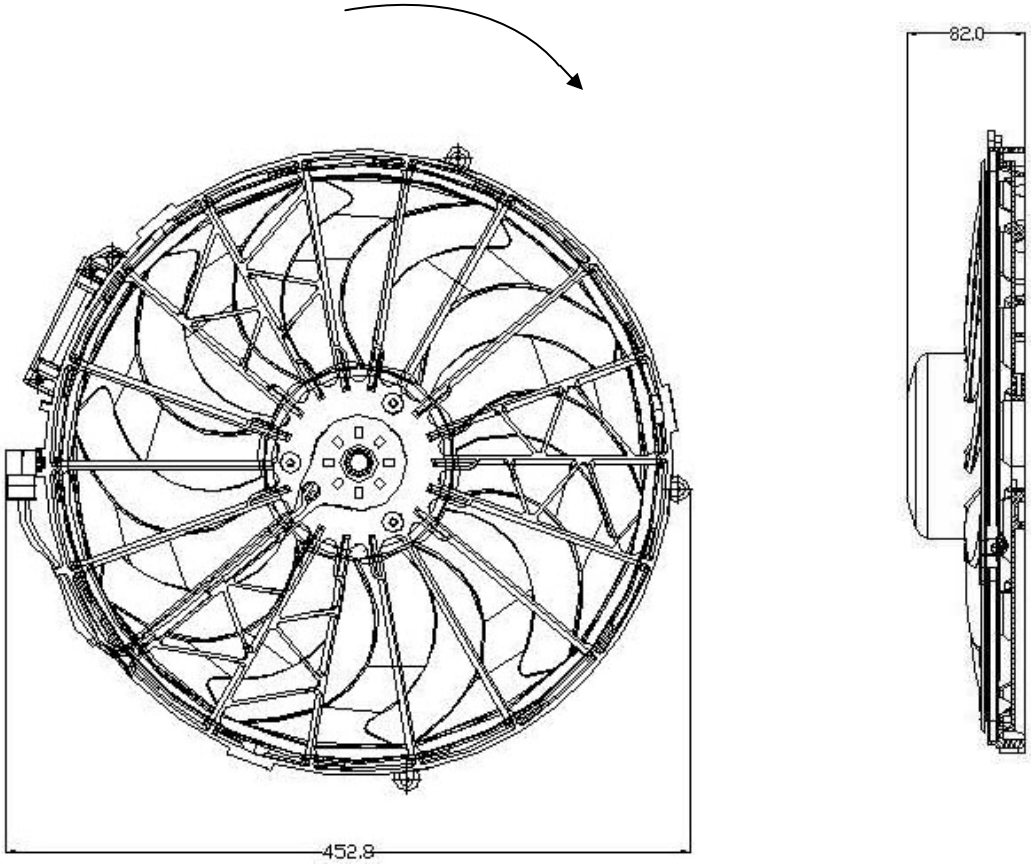

All trademarks and vehicle models (including their names and pictures) mentioned in this catalogue are for reference only. Our production is not original replacement parts but interchangeable against original parts.

All trademarks and vehicle models (including their names and pictures) mentioned in this catalogue are for reference only. Our production is not original replacement parts but interchangeable against original parts.

Maker	Model	From	To	EC	Fuel	Trans.	A/C	Extra Vehicle info
BMW	E36 3-SERIES	12/90	2/94	M40	PETROL	MAN	YES	316i SEDAN
BMW	E36 3-SERIES	1/91	2/94	M40	PETROL	AUTO	YES	316i SEDAN
BMW	E36 3-SERIES	12/89	2/94	M40	PETROL	MAN	YES	318i SEDAN
BMW	E36 3-SERIES	2/90	2/94	M40	PETROL	AUTO	YES	318i SEDAN
BMW	E36 3-SERIES	2/91	1/96	M42	PETROL	MAN	YES	318is COUPE
BMW	E36 3-SERIES	5/92	2/96	M42	PETROL	AUTO	YES	318is COUPE
BMW	E36 3-SERIES	5/93	12/96	M42	PETROL	MAN	YES	318is SEDAN
BMW	E36 3-SERIES	5/93	12/95	M42	PETROL	AUTO	YES	318is SEDAN
BMW	E36 3-SERIES	3/94	8/00	M41	DIESEL	MAN	YES	318tds COMPACT
BMW	E36 3-SERIES	1/94	3/98	M41	DIESEL	MAN	YES	318tds SEDAN
BMW	E36 3-SERIES	1/95	4/99	M41	DIESEL	MAN	YES	318tds TOURING
BMW	E36 3-SERIES	2/91	4/95	M50	PETROL	MAN	YES	320i COUPE
BMW	E36 3-SERIES	6/91	7/95	M50	PETROL	AUTO	YES	320i COUPE
BMW	E36 3-SERIES	1/90	3/95	M50	PETROL	MAN	YES	320i SEDAN
BMW	E36 3-SERIES	1/90	9/95	M50	PETROL	AUTO	YES	320i SEDAN
BMW	E36 3-SERIES	10/90	7/95	M50	PETROL	MAN	YES	325i COUPE
BMW	E36 3-SERIES	11/90	7/95	M50	PETROL	AUTO	YES	325i COUPE
BMW	E36 3-SERIES	11/89	7/95	M50	PETROL	MAN	YES	325i SEDAN
BMW	E36 3-SERIES	12/89	7/95	M50	PETROL	AUTO	YES	325i SEDAN
BMW	E36 3-SERIES	1/91	2/98	M51	DIESEL	MAN	YES	325td SEDAN
BMW	E36 3-SERIES	1/91	2/98	M51	DIESEL	AUTO	YES	325td SEDAN
BMW	E36 3-SERIES	3/93	3/98	M51	DIESEL	MAN	YES	325tds SEDAN
BMW	E36 3-SERIES	3/93	2/98	M51	DIESEL	AUTO	YES	325tds SEDAN
BMW	E36 3-SERIES	10/94	5/99	M51	DIESEL	AUTO	YES	325tds TOURING
BMW	E36 3-SERIES	11/94	5/99	M51	DIESEL	MAN	YES	325tds TOURING
BMW	E34 5-SERIES	5/95	6/96	M43	PETROL	MAN	YES	518g TOURING
BMW	E34 5-SERIES	4/89	5/94	M40	PETROL	MAN	YES	518i SEDAN
BMW	E34 5-SERIES	1/93	4/94	M40	PETROL	AUTO	YES	518i SEDAN

All trademarks and vehicle models (including their names and pictures) mentioned in this catalogue are for reference only. Our production is not original replacement parts but interchangeable against original parts.

All trademarks and vehicle models (including their names and pictures) mentioned in this catalogue are for reference only. Our production is not original replacement parts but interchangeable against original parts.

Maker	Model	From	To	EC	Fuel	Trans.	A/C	Extra Vehicle info
BMW	E34 5-SERIES	3/90	12/95	M43	PETROL	MAN	YES	518i SEDAN
BMW	E34 5-SERIES	3/94	10/95	M43	PETROL	AUTO	YES	518i SEDAN
BMW	E34 5-SERIES	11/93	6/96	M43	PETROL	MAN	YES	518i TOURING
BMW	E34 5-SERIES	11/92	5/94	M40	PETROL	MAN	YES	518i TOURING
BMW	E34 5-SERIES	6/87	8/90	M20	PETROL	MAN/AUTO	YES	520i SEDAN
BMW	E34 5-SERIES	11/87	4/90	M20	PETROL	MAN	YES	520i SEDAN
BMW	E34 5-SERIES	2/88	4/90	M20	PETROL	AUTO	YES	520i SEDAN
BMW	E34 5-SERIES	3/89	12/95	M50	PETROL	MAN/AUTO	YES	520i SEDAN
BMW	E34 5-SERIES	11/90	6/96	M50	PETROL	MAN	YES	520i TOURING
BMW	E34 5-SERIES	2/91	6/96	M50	PETROL	AUTO	YES	520i TOURING
BMW	E34 5-SERIES	7/87	8/91	M21	DIESEL	MAN/AUTO	YES	524td SEDAN
BMW	E34 5-SERIES	7/87	8/91	M21	DIESEL	AUTO	YES	524td SEDAN
BMW	E34 5-SERIES	6/87	7/90	M20	PETROL	MAN	YES	525i SEDAN
BMW	E34 5-SERIES	6/87	9/90	M20	PETROL	AUTO	YES	525i SEDAN
BMW	E34 5-SERIES	1/89	12/95	M50	PETROL	MAN	YES	525i SEDAN
BMW	E34 5-SERIES	5/89	12/95	M50	PETROL	AUTO	YES	525i SEDAN
BMW	E34 5-SERIES	12/90	6/96	M50	PETROL	MAN	YES	525i TOURING
BMW	E34 5-SERIES	12/90	5/96	M50	PETROL	AUTO	YES	525i TOURING
BMW	E34 5-SERIES	5/91	11/95	M50	PETROL	MAN	YES	525ix SEDAN
BMW	E34 5-SERIES	4/91	10/95	M50	PETROL	AUTO	YES	525ix SEDAN
BMW	E34 5-SERIES	7/91	3/96	M50	PETROL	MAN	YES	525ix TOURING
BMW	E34 5-SERIES	10/91	3/96	M50	PETROL	AUTO	YES	525ix TOURING
BMW	E34 5-SERIES	12/92	11/95	M51	DIESEL	MAN	YES	525td SEDAN
BMW	E34 5-SERIES	1/93	11/95	M51	DIESEL	AUTO	YES	525td SEDAN
BMW	E34 5-SERIES	1/93	5/96	M51	DIESEL	AUTO	YES	525td TOURING
BMW	E34 5-SERIES	11/92	5/96	M51	DIESEL	MAN	YES	525td TOURING
BMW	E34 5-SERIES	2/90	12/95	M51	DIESEL	AUTO	YES	525tds SEDAN
BMW	E34 5-SERIES	2/90	11/95	M51	DIESEL	MAN	YES	525tds SEDAN

All trademarks and vehicle models (including their names and pictures) mentioned in this catalogue are for reference only. Our production is not original replacement parts but interchangeable against original parts.

All trademarks and vehicle models (including their names and pictures) mentioned in this catalogue are for reference only. Our production is not original replacement parts but interchangeable against original parts.

Maker	Model	From	To	EC	Fuel	Trans.	A/C	Extra Vehicle info
BMW	E34 5-SERIES	8/91	6/96	M51	DIESEL	MAN	YES	525tds TOURING
BMW	E34 5-SERIES	7/91	6/96	M51	DIESEL	AUTO	YES	525tds TOURING
BMW	E34 5-SERIES	6/87	7/90	M30	PETROL	MAN	YES	530i SEDAN
BMW	E34 5-SERIES	6/87	7/90	M30	PETROL	AUTO	YES	530i SEDAN
BMW	E34 5-SERIES	3/92	10/95	M60	PETROL	MAN	YES	530i SEDAN
BMW	E34 5-SERIES	3/92	12/95	M60	PETROL	AUTO	YES	530i SEDAN
BMW	E34 5-SERIES	6/92	6/96	M60	PETROL	MAN	YES	530i TOURING
BMW	E34 5-SERIES	5/92	6/96	M60	PETROL	AUTO	YES	530i TOURING
BMW	E34 5-SERIES	3/87	4/93	M30	PETROL	MAN	YES	535i SEDAN
BMW	E34 5-SERIES	4/87	12/92	M30	PETROL	AUTO	YES	535i SEDAN
BMW	E34 5-SERIES	7/93	11/95	M60	PETROL	MAN	YES	540i SEDAN
BMW	E34 5-SERIES	3/92	12/95	M60	PETROL	AUTO	YES	540i SEDAN
BMW	E34 5-SERIES	8/93	6/96	M60	PETROL	MAN	YES	540i TOURING
BMW	E34 5-SERIES	5/93	6/96	M60	PETROL	AUTO	YES	540i TOURING
BMW	E34 5-SERIES	4/88	7/95	S38	PETROL	MAN	YES	M5 3.6 SEDAN
BMW	E34 5-SERIES	3/92	8/95	S38	PETROL	MAN	YES	M5 TOURING
BMW	E32 7-SERIES	7/86	3/94	M30	PETROL	MAN/AUTO	YES	730i SEDAN
BMW	E32 7-SERIES	3/91	3/94	M60	PETROL	MAN	YES	730i SEDAN
BMW	E32 7-SERIES	6/91	4/94	M60	PETROL	AUTO	YES	730i SEDAN
BMW	E32 7-SERIES	12/87	2/92	M30	PETROL	MAN	YES	730iL SEDAN
BMW	E32 7-SERIES	4/88	3/94	M30	PETROL	AUTO	YES	730iL SEDAN
BMW	E32 7-SERIES	1/93	5/93	M60	PETROL	MAN	YES	730iL SEDAN
BMW	E32 7-SERIES	6/92	3/94	M60	PETROL	AUTO	YES	730iL SEDAN
BMW	E32 7-SERIES	10/85	6/92	M30	PETROL	MAN	YES	735i SEDAN
BMW	E32 7-SERIES	10/85	7/92	M30	PETROL	AUTO	YES	735i SEDAN
BMW	E32 7-SERIES	6/87	2/92	M30	PETROL	MAN	YES	735iL SEDAN
BMW	E32 7-SERIES	6/87	7/92	M30	PETROL	AUTO	YES	735iL SEDAN
BMW	E32 7-SERIES	9/91	3/94	M60	PETROL	AUTO	YES	740i SEDAN

All trademarks and vehicle models (including their names and pictures) mentioned in this catalogue are for reference only. Our production is not original replacement parts but interchangeable against original parts.

All trademarks and vehicle models (including their names and pictures) mentioned in this catalogue are for reference only. Our production is not original replacement parts but interchangeable against original parts.

Maker	Model	From	To	EC	Fuel	Trans.	A/C	Extra Vehicle info
BMW	E32 7-SERIES	10/91	3/94	M60	PETROL	AUTO	YES	740iL SEDAN
BMW	E32 7-SERIES	7/87	3/94	M70	PETROL	AUTO	YES	750i SEDAN
BMW	E32 7-SERIES	11/86	3/94	M70	PETROL	AUTO	YES	750iL SEDAN
BMW	E32 7-SERIES	9/88	3/94	M70	PETROL	AUTO	YES	750iLS SEDAN
BMW	E31 8-SERIES	01/96	12/99	M62	PETROL	MAN/AUT	YES	840Ci
BMW	E31 8-SERIES	02/93	02/96	M60	PETROL	MAN/AUT	YES	840i
BMW	E31 8-SERIES	04/90	10/94	M70	PETROL	MAN/AUT	YES	850Ci
BMW	E31 8-SERIES	04/94	12/99	M73	PETROL	AUT	YES	850Ci
BMW	E31 8-SERIES	02/92	10/96	S70	PETROL	MAN	YES	850Csi

All trademarks and vehicle models (including their names and pictures) mentioned in this catalogue are for reference only. Our production is not original replacement parts but interchangeable against original parts.