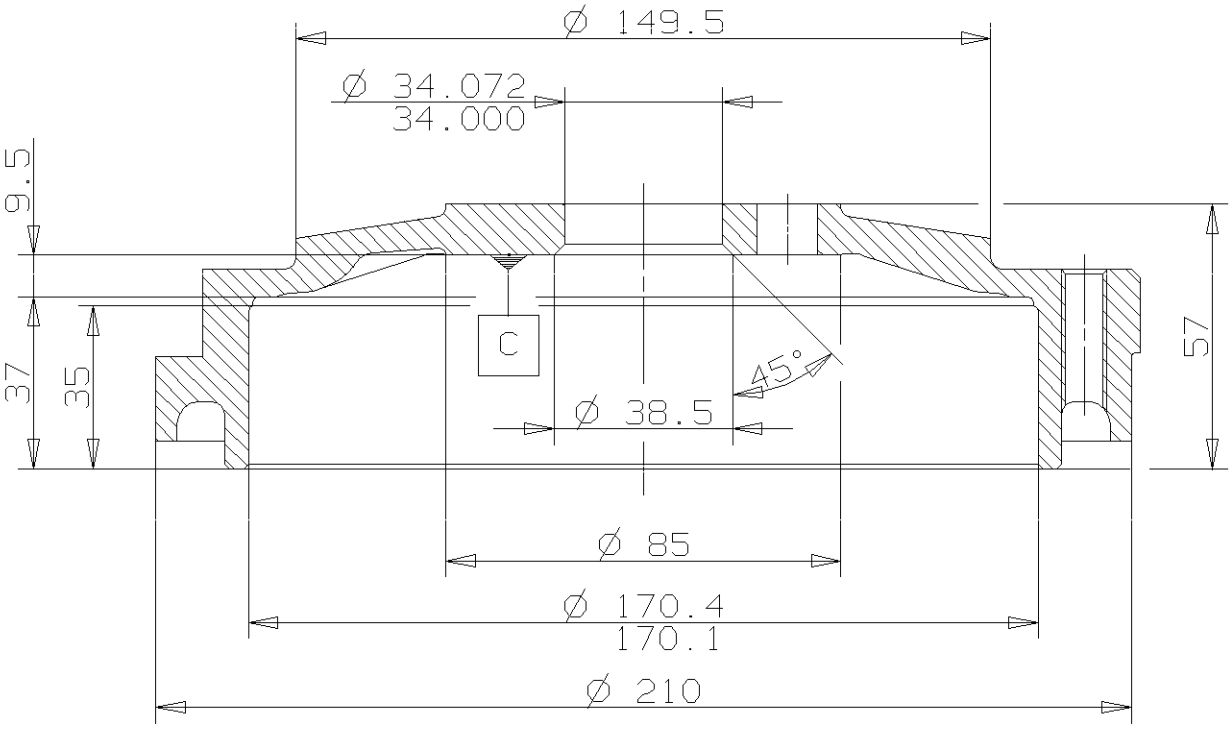


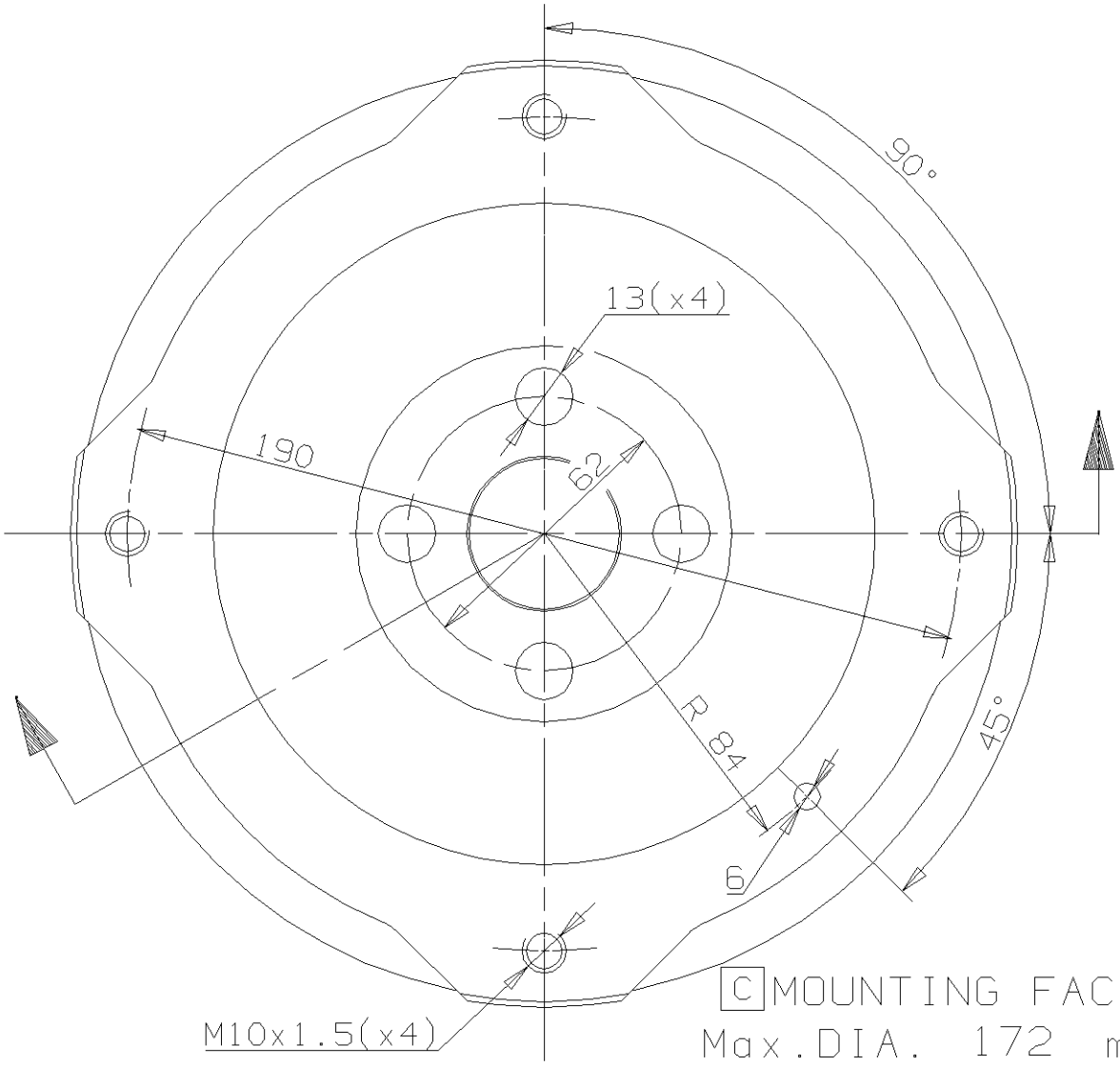


C MOUNTING FACE
Max.DIA. 172 mm
Weight 3.4 Kg