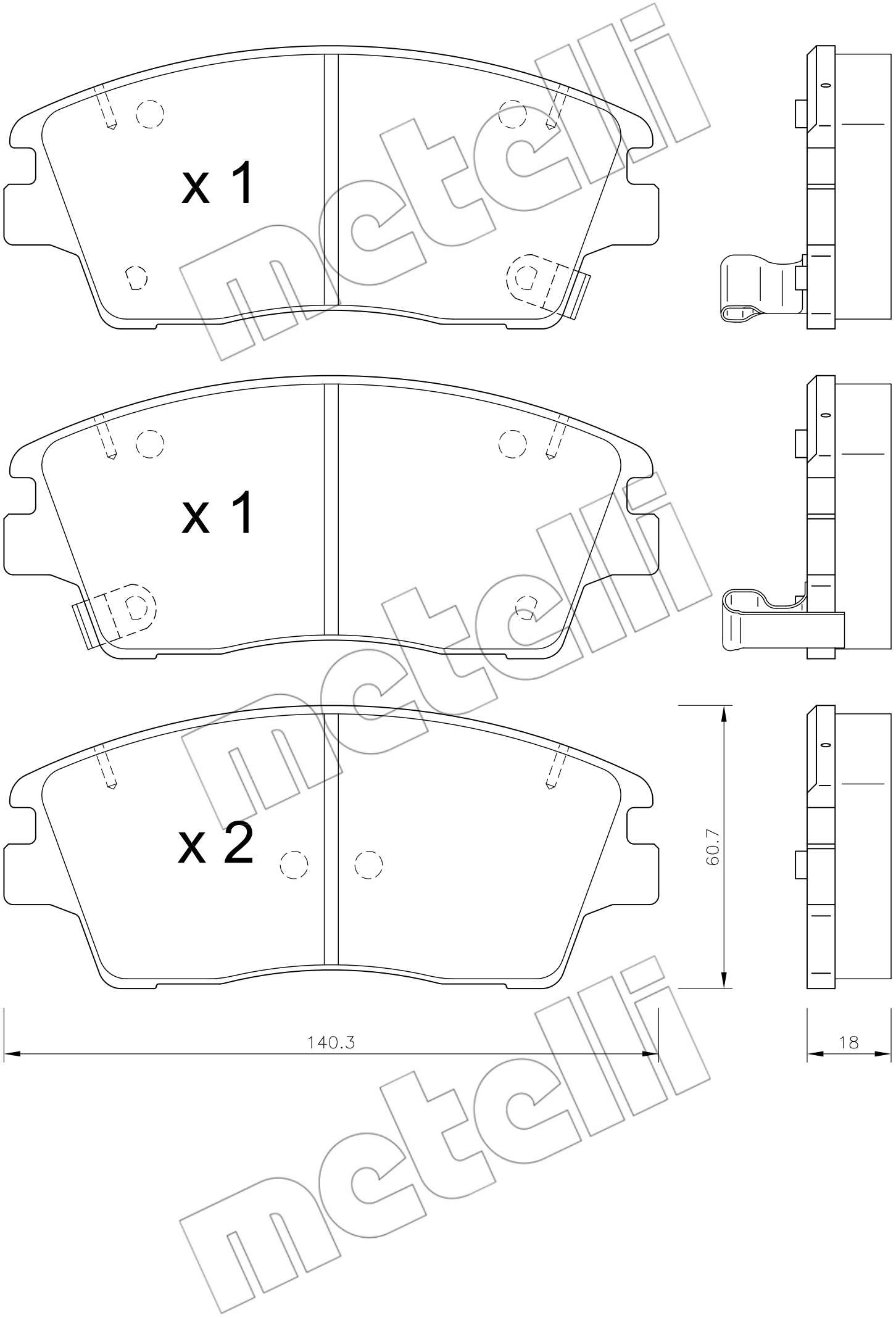
x 1
x 1
x 2
60.7
140.3
18
metelli
metelli
metelli